Plycem® by elementia materials

Installation guide
PLYCEM EUREKA ECOFOSA TANKS

IMPACT RESISTANT | LIGHTWEIGHT | HERMETIC | DURABLE | ECO-FRIENDLY | EASY TO INSTALL

Plycem introduces to the market its new line of polyethylene pit for wastewater treatment, with auto-cleaning system, constituting one more solution that Plycem provides for the care of health and the environment.

PRESENTATION

STORAGE AND HANDLING

- Store tanks on a flat surface free of objects that will damage the tank walls or floor.
- Store on no more than three levels in a horizontal position at ground level.

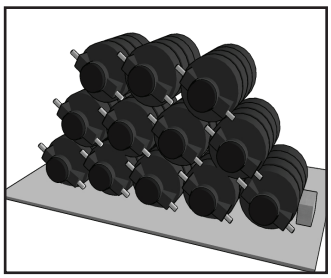

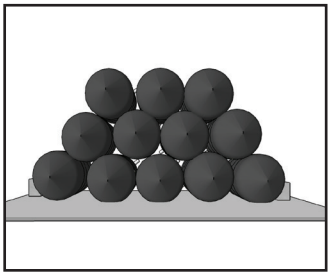

- Avoid storing tanks on mezzanine edges or places where they can fall and hit. Do not stow on more than two levels.

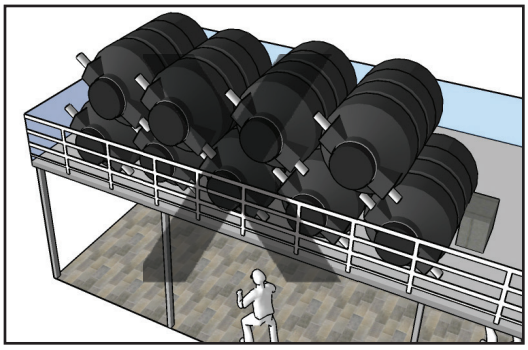

- When handling, they should not be thrown from heights, dragged or hit against walls or floors.
- Lifting and transporting by two people.

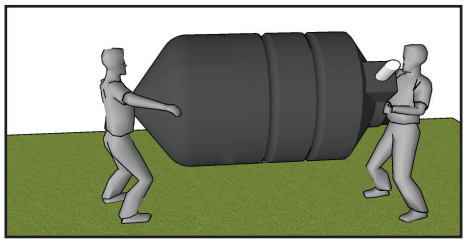

- Protect the connection plans and other system components during handling and storage.

DIMENSIONS

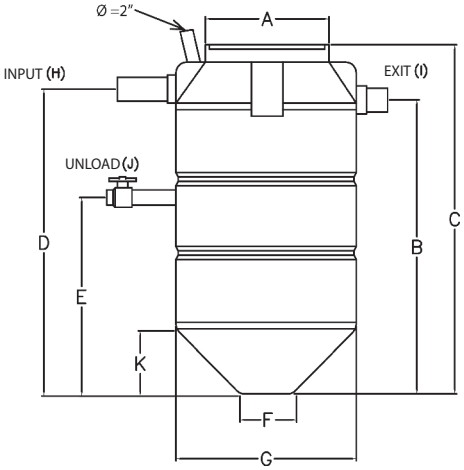

CONCEPT	UNIT	MEASUREMENTS	
Capacity	Liters	600	1300
No. of people		5	10
Color		Black	Black
Weight	Kg	16	39
A	cm	50	50
B	cm	134	156.5
C	cm	160	191.5
D	cm	139	166.5
E	cm	112	136
F	cm	25	25
G	cm	86	115
H	pulg	4	4
I	pulg	4	4
J	pulg	2	2
K	cm	30.7	40.7

IDEAL USES

For rural or suburban areas with water supply lacking sewerage and with enough land for oxidation fields.

Suitable for:

- Individual housing, small restaurants, stores, etc., as a transitional solution until connection to the sewerage system is obtained.
- Buildings where the sewage loads are in small quantities or irregularly shaped, such as: country houses, offices, etc.

PROPERTIES

100% airtight.

Lightweight and easy to install.

High resistance to hits, due to its great plasticity.

Manufactured in one piece in black outside and white inside.

Very versatile, they can be drilled, and repaired without complications.

Manufactured under the strictest quality standards, using ISO-9000 certified raw materials with the following properties:

TEST	ASTM STANDARD
HIGH QUALITY	D-792
VERY RESISTANT	D-256
HIGH FLEXURAL MODULUS	D-790

COMPONENTS

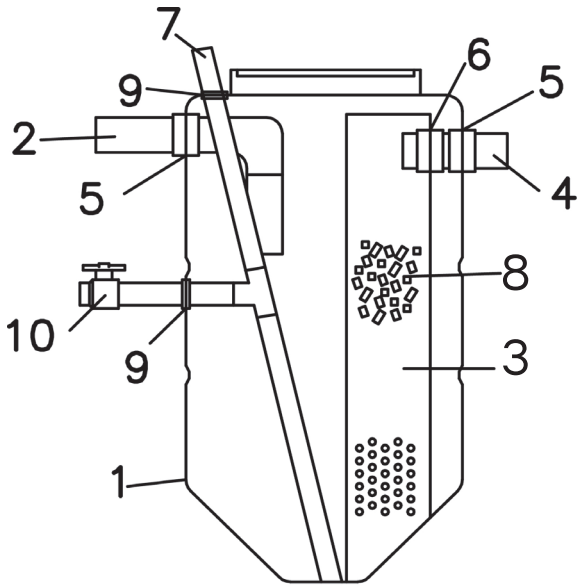

Component chart

No. pieces	Name	Location
1	Ecofosa in polyethylene	1
1	4" PVC reinforced pipe including elbow or tee	2
1	Polyplas filter in polyethylene	3
1	4" PVC outflow pipe	4
2	4" Rubber gasket (long lip) for inflow and outflow	5
1	4" rubber gasket (short lip) for Polyplas filter	6
1	2" Sewage sludge extraction pipe (bag with assembly material)	7
1	Filter material	8
2	2" rubber gasket for extraction tube	9
0	2" valve (not included)	10

INSTALLATION INSTRUCTIONS

STEP 1.
LAND TYPE PREPARATION (EXPANSION TEST)

Determination of soil type (Does not apply to hard or rocky soils).

- Take a clod of soil and grind it into fine soil.
- Place this material inside a glass or bottle with vertical walls, measure the height that the land inside the container reaches (initial h) with the help of a ruler or measuring tape (5 cm is enough).
- Add water until the volume of fine land is completely covered and let stand for at least 1 hour to allow the material to expand.
- After this time, determine the final height (h final) reached by the volume of fine soil.
- Finally determine the approximate free expansion

$$\% \text{ Expansion} = \frac{h_{final} - h_{initial}}{h_{initial}} \times 100$$

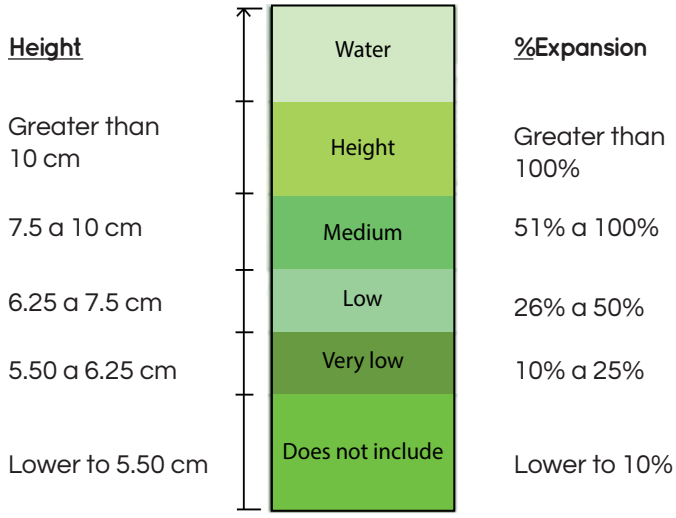

According to the result obtained, determine the soil expansion potential of the soil in the following chart:

% Expansión	Potential for free expansion	Installation method
Less than 10	Does not include	Excavate with a diameter 50 cm larger than the diameter of the tank, the same size as the bottom cement base. Backfill with stabilized material.
25	Very low	Obtain the slope considering the top of the excavation to be 20 cm in diameter, larger than the size of the cement base at the bottom. Fill with stabilized material.
50	Low	Obtain the slope considering the top of the excavation to be 20 cm in diameter, larger than the size of the cement base at the bottom. Fill with stabilized material.
100	Medium	Obtain the slope considering the top of the excavation to be 25 cm in diameter, larger than the size of the cement base at the bottom. Fill with stabilized material.
More than 100	Height	Obtain the slope considering the top of the excavation to be 25 cm in diameter, larger than the size of the cement base at the bottom. Fill with stabilized material.

Hard soil or rocky soil (very low or no expansion).

It is all that where excavation is very difficult due to the consistency of the soil. It is formed by rocks, tepetate in very compacted layers. In this case the instability is practically null.

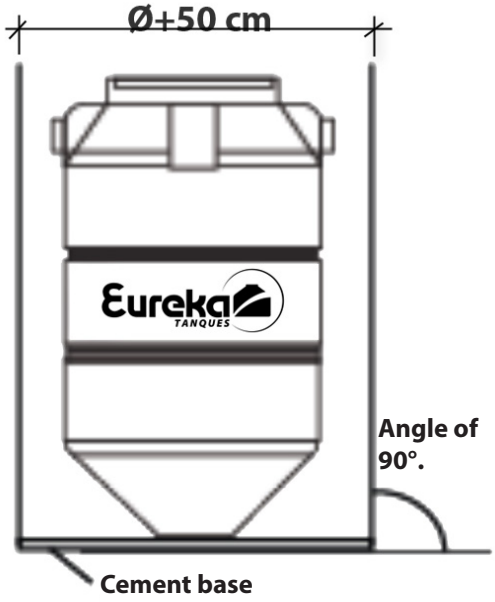

Stable soil or medium resistance (Low Expansion).

All soils that present medium resistance to weight, do not slump so quickly. These are considered the soils of tepetate, clays of medium resistance, etc. In this case the instability of the ground is not considerable.

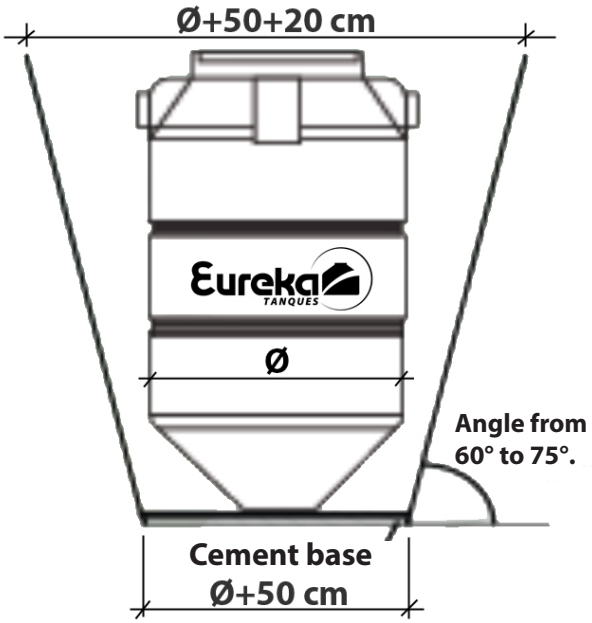

Soft soil or plastic soil or unstable rocky soil (High - Medium Expansion).

It is any material that is unstable under heavy weight loads (slump) and does not present resistance to excavation. In this kind are found, those that are or were of agricultural use, lands with expansive clays, with subterranean currents. It is important to monitor the water level. When it is high, water shall be extracted until it reaches the minimum level.

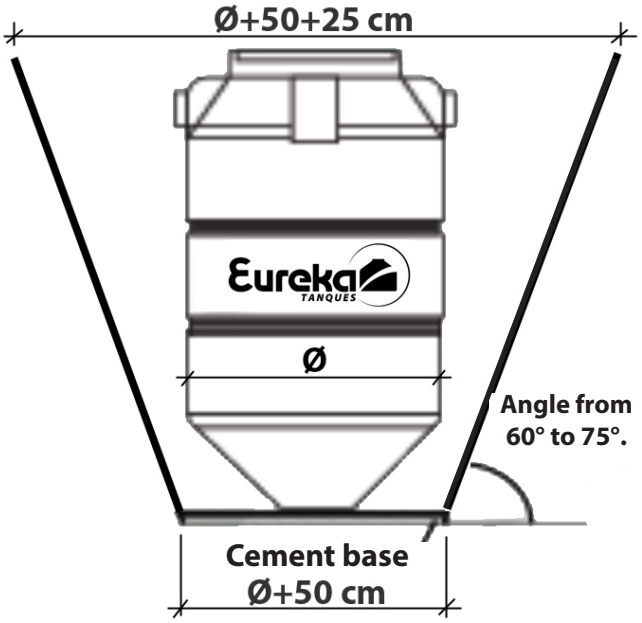

STEP 2.
EXCAVATION

- For the correct installation of your Ecofosa, the slope must be considered, until an angle is reached such that the material remains stable, without collapsing inside the excavation.

- To prevent the Ecofosa will collapse, before filling the hole, the Ecofosa must be filled with water.

- For the cement base at the bottom of the excavation it is recommended to make it with a mixture of cement sand 1:5 and electrowelded mesh. A minimum thickness of 10 cm is recommended to allow a firm and uniform support. To stabilize the excavation wall, prepare a 1:5 cement-sand mixture with wire anchored with 2 to 3 cm long rods every 50 cm. Center the Ecofosa and fill it with water up to the outflow pipe. Fill the conical part with soil free of stones, clods and organic matter, compacting it properly with special curved tampers or shovel, so that the Ecofosa rests on its lower quadrant in its entire diameter. The cylindrical part can be filled with material from the excavation without gravel, stones or any other material that could damage or break the walls of the Ecofosa. You can add lime mixed with the backfill in a 6:1 ratio. Compact in 20 cm thick layers. You can also use compacted ballast.

STEP 3.
ASSEMBLY

- The Ecofosa can be assembled before lowering it into the excavation or it can be assembled already placed in the excavation. The assembly of the accessories is easy since it can be handled easily inside the Ecofosa.
- The accessories are supplied assembled and packed in a sealed bag.
- Attach the rubber sealing gaskets (long lip facing out) to the Ecofosa. If necessary to maintain hermetic seal, use silicone sealant (5).
- From the inside of the Ecofosa the outside, insert the Ø 4" (10 cm) PVC pipe with the assembled elbow into the tank inlet. To facilitate the assembly of the pipe in the seal, soak the inside of the pipe with water (2).
- At the tank outlet, also from inside to outside, mount the Ø 4" (10 cm) pipe. Wet the inside of the rubber seal with water to facilitate assembly (4).
- Place the POLYPLAS rising filter with its rubber seal and the tank outlet pipe as shown in the diagram. Soak the inside of the rubber seal (3).
- The PVC filter material is placed inside the POLYPLAS filter. The filling material should be kept inside the mesh bag. If it is necessary to clean this material. Do it outside the Ecofosa and inside the screen (8).
- Place the rubber gaskets (long lip facing outward) in the side and top holes of the Ecofosa as shown in the figure. If necessary to maintain tightness, use silicone sealant (5).
- The sludge removal device can be assembled on the outside or inside of the Ecofosa (7).
- Once the sludge extraction device is in place, it is recommended that a plug be placed in the upper outlet pipe to prevent rainwater from entering or to prevent mosquitoes from proliferating.
- Place a 2" valve (not included) for the extraction of all (seal it with adhesive) from the interior of the Ecofosa.

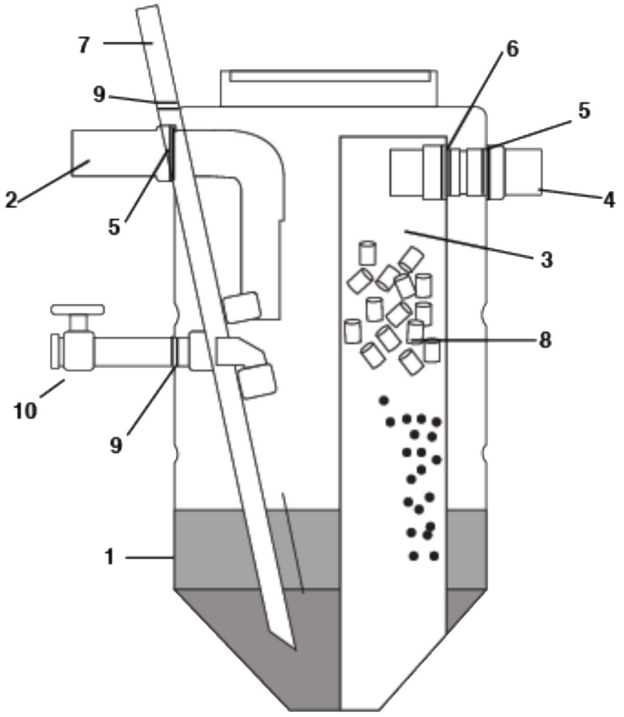

Sludge Extraction Device Assembly Instructions

The device for the extraction of sludge from inside the sludge pit comes in a bag to be assembled on site, it contains:

1. Leg (long pipe)

2. Upper suction pipe

3. Outlet pipe

4. Tee.

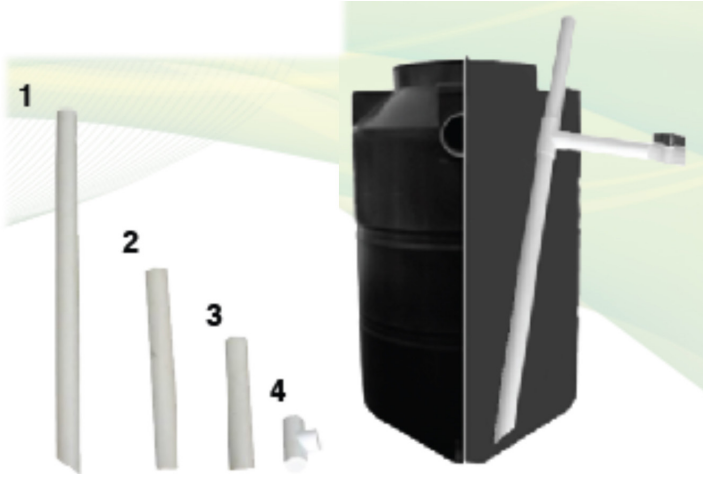

1:

Insert the tee (4) into the leg of the device (long tube) (1) and join both.

2:

Insert the upper suction pipe (2) and join with the tee (4) and the leg of the device (long pipe) (1).

3:

Embed and cement the outlet pipe (3) to the device assembled in step 2 with PVC cement.

4:

Introduce the device into the tank and place the pipes into the respective holes.

5:

The valve and the outlet pipe (3) are to be installed and bonded with PVC cement.

6:

Your ECOFOSA is ready to start operating.

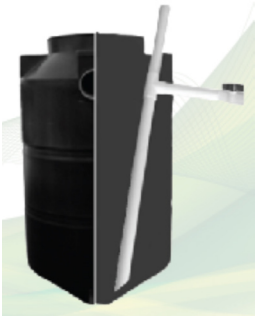

STEP 4.
LOWERING ECOFOSA

Download the Ecofosa as shown in the figure, avoid hitting the walls of the tank. In case of a hard hit or strong friction, it is recommended to take it out and check that it has not been damaged. Avoid stones or other objects between the cement slab and the base of the Ecofosa tank to avoid damaging it. The Ecofosa shall have a free space of at least 20 cm around the tank body.

The tank shall never be handled full of water or solids.

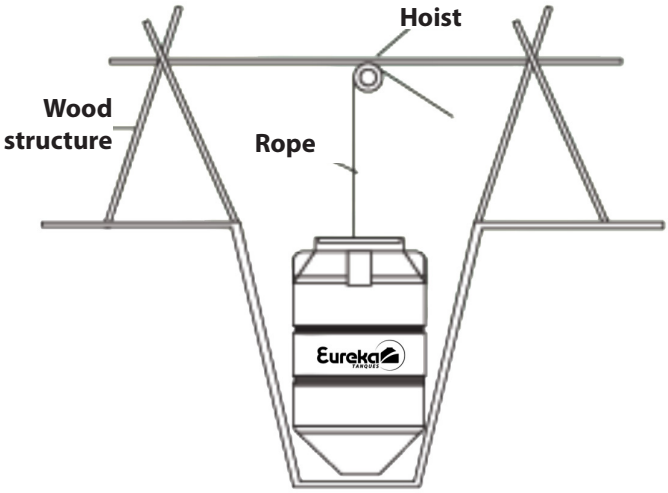

In very hard soils the Ecofosa tank can be semi-buried. In the case of stable soil and soft soil, the Ecofosa should be installed underground.

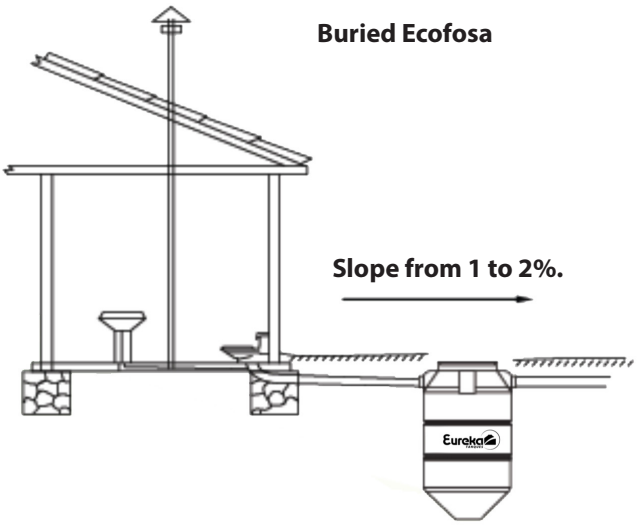

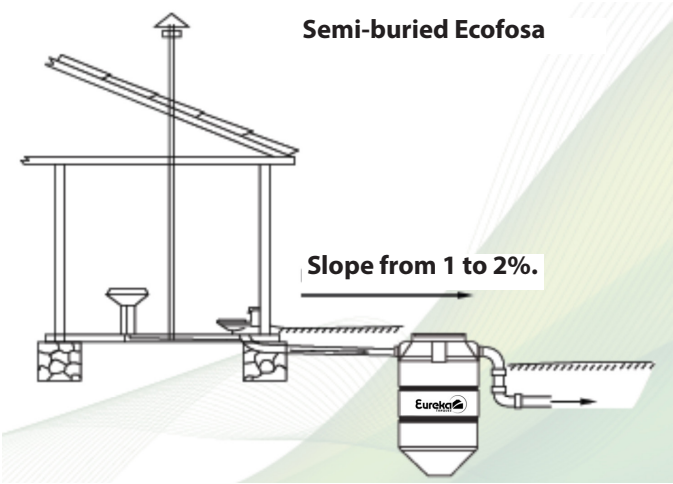

As a safety precaution, place a suitable structure that does not rest on the top of the Ecofosa. Place a fence around the septic system area to easily locate the site and construct a reinforced concrete slab over the sludge bed and over the ECOFOSA inspection cover.

STEP 5.
REGISTRATION FOR REMOVED SLUDGE

Locate the Autocleaning Ecofosa according to the hydraulic line (drainage) and determine the position of the sludge discharge. Construct a 60x60 cm manhole (215 lt. volume) next to the edge of the tank. Once Ecofosa is seated and level, start the assembly of the register, proceed with the installation and making of the piping connections. To avoid accidents due to gas accumulation, a vent pipe should be installed.

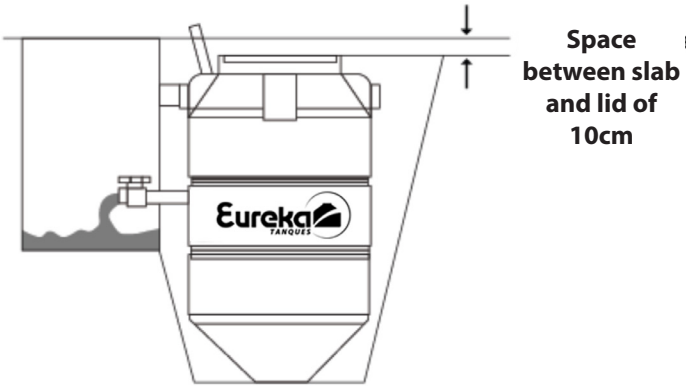

This sludge layer or sludge box can be constructed as follows:

- Bottom layer gravel between 1.6 and 51 mm (1/16” and 2”) of 0.20 m thickness.
- Middle layer with sand with an effective size between 0.3 and 1.6 mm (1/64” and 1/16”) of 0.15 m thickness.
- Top layer place thin bricks (2.5 cm thick) 2 to 3 cm apart and fill the spaces with sand.

Do not confuse the sludge drying bed with the well or absorption field, which is where the effluent water is discharged from the Ecofosa.

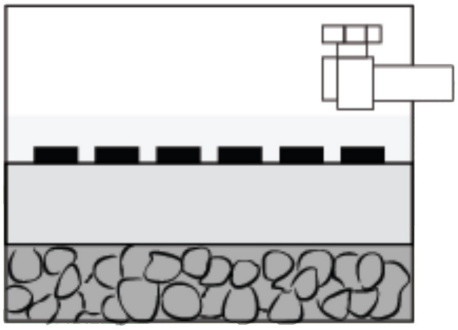

STEP 6.
TANK INTERCONNECTIONS

If you need to increase the water treatment capacity, you can interconnect several ECOFOSAS in parallel, respecting the recommended minimum slopes and type of excavation.

Right installation

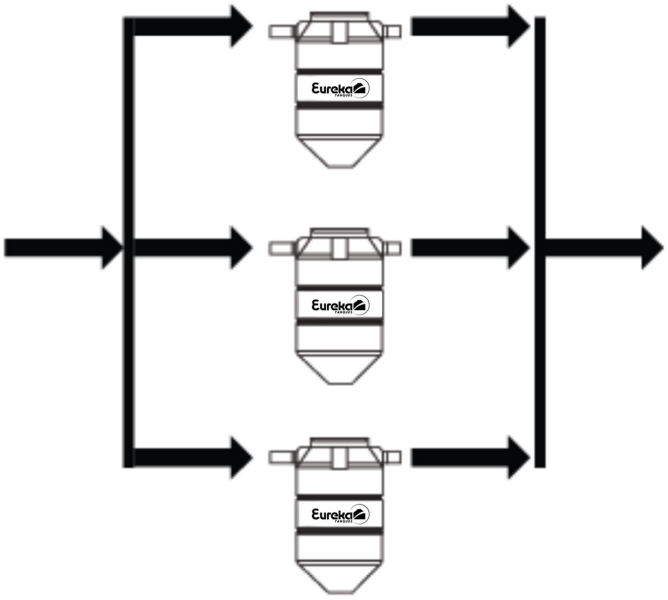

Wrong installation

STEP 7.
ECOFOSA PLACE

Before putting the Ecofosa into operation, place a PVC vent line for the outflow of gases from the Ecofosa to the outside, which can be placed over the effluent evacuation line of the toilet, placing a "T" so that it has an outlet 0.35 m above the roof level. You can also place a 1/2" diameter connection on the shoulder opposite the sludge extraction system of the Ecofosa. Remember that good ventilation prevents bad smells.

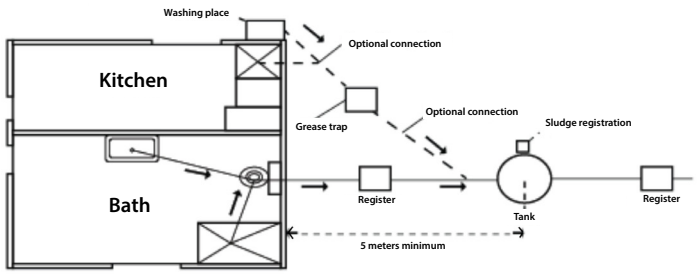

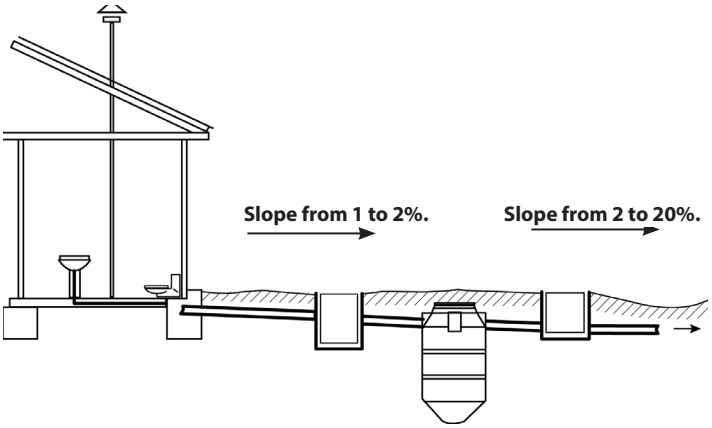

STEP 8.
OPERATION

The function of the Ecofosa is to remove suspended particulate matter through sedimentation. The dirty water enters through the feed pipe (1) to the sedimentation zone, where the larger, heavier particles tend to slide down the sloping walls to the bottom, trapping lighter particles in their path. They accumulate in the cone of the pit known as the digestion zone where anaerobic bacteria tend to decompose them and finally, they are removed after a certain time. In the upper part of the Ecofosa there can be fats or creams that are degraded to gases, liquids or heavy solids by the bacteria, falling to the bottom of the Ecofosa. If the layer is very thick, you can remove it with a shovel, just remove the Ecofosa register. The treated water passes through the filter orifices (3), where, through the filtering material, the small particles of organic matter that could pass through are eliminated.

Finally, the water exits through the outlet pipe (2) to be evacuated to the field, planters or the drainage system. Another option is the infiltration of water into the subsoil.

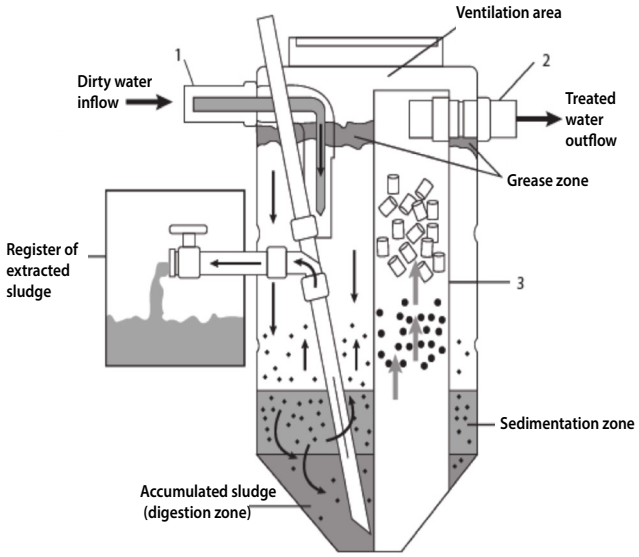

STEP 9.
INITIAL OPERATION

The Ecofosa should be inoculated with sludge from another similar facility to accelerate the development of anaerobic microorganisms responsible for the mineralization of organic matter. If it is not possible to obtain sludge from another facility, 5 shovelfuls of manure dissolved in water can be added to inoculate the system.

During start-up, small amounts of floating material may be present in the upper zone during the stabilization period, an excess of floating material in this zone can produce offensive smells and at the same time cover its surface with a small layer of foam which impedes the escape of gases. To keep these conditions under control, the foam layer should be broken or broken up manually before it dries by submerging the layer with rakes, shovels or other means until the septic process is stabilized.

When the system is not used for more than 60 days to restart again, inoculate with 5 shovelfuls of manure dissolved in water and flush it into the toilet.

STEP 10.
SLUDGE REMOVAL AND CLEANING

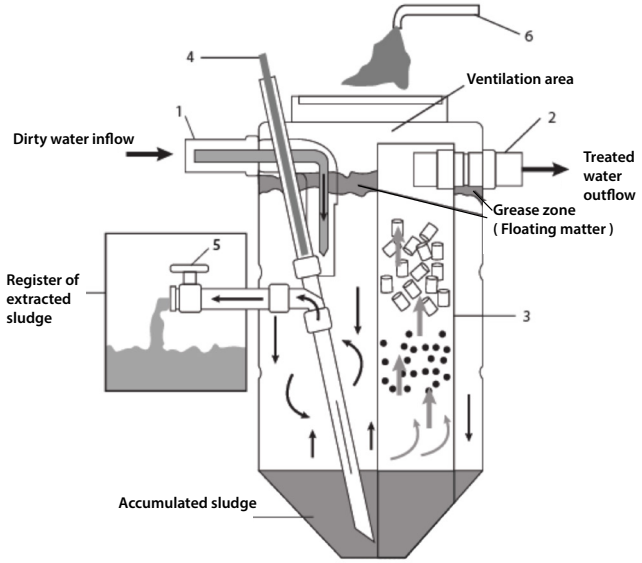

The digested sludge is removed from the digestion chamber (bottom of the Ecofosa) by slowly opening the sludge line valve (5) and allowing it to drain into the drying layers, ensuring that it is evenly distributed on the surface of the drying layers. When there is compacted material at the bottom of the Ecofsa, including sand in the discharge pipe, it may require probing or the need for flushing. Close the valve (5), insert a stick (4) through the extraction tube and begin to push it in and out, if there is a blockage, a hose can be introduced to add water (6) and make the sludge less viscous (sometimes it is necessary to put the water through the extraction tube). Open the valve (5) fully once the flow stabilizes, the valve should be closed until a regular flow is obtained. The sludge drainage should be prolonged until the expected amount of sludge has been drained.

Under no circumstances should all of the sludge be drained, being reasonable no more than 3/4 of the total volume or the amount that can be accepted by a drying bed. After each sludge discharge, the discharge lines should be drained and filled with water or sewage to prevent the sludge from hardening and clogging the piping. Cleaning should be done only to remove sludge and the top layer of scum and solids and in no case should the Ecofosa be completely emptied. Immediately after cleaning, fill to normal operating level with water.

It is recommended that sludge be removed from the Ecofosa at least every 6 months.

Maintenance chart

Capacity	Annual sludge cleaning	Amount of quicklime for mixing
600 L	100 L	10 kg
1300 L	200 L	20 kg

STEP 11.
INSPECTION AND MAINTENANCE

It is recommended that the Ecofosa be inspected at least every six months as this is the only way to determine when maintenance or cleaning is required (a very thick layer or a leakage of floating material at the effluent outlet will be an indication of the need for more frequent sludge removal from the tank).

SELF-CLEANING ECOFOSA

Periodic cleaning is the best way for the Ecofosa to function properly and provide good service.

- Great care must be taken with gases because when mixed with air they will make a highly explosive mixture.
- The presence of direct fire or operators with cigarettes should be prohibited when draining sludge into the drying layers.
- Avoid disposing of: dental floss, feminine hygiene products, condoms, diapers, cotton swabs, cigarette butts, coffee grounds, cat or dog litter, paper towels and other kitchen items and bathroom that can clog, and potentially damage, the components of the Ecofosa.

- Pouring household chemicals, gasoline, oil, pesticides, antifreeze and paint can destroy the biological treatment of the system, or can contaminate surface or ground water.

- In case of areas with high water table, cleaning or maintenance is recommended in the dry season, when the water table is lower.

SLUDGE MUDS

- Avoid discharging oils, grease and other oily residues to the drying beds as they will clog the sand pores

The drying beds must be properly conditioned each time sludge is to be discharged from the Ecofosa, preparation includes the following work:

- Remove all old sludge as soon as it has reached the level of dewatering that allows it to be handled. Never add sludge to a bed containing sludge.
- Remove all weeds or other plant debris.
- Scrape the sand surface with rakes or any other device prior to the addition of sludge.

Periodically the sand layer should be replaced until it reaches its original thickness. The sludge removed from the drying layers can be disposed of by burying it or it can be used for soil improvement or stored for a period of time to achieve greater dehydration and thus a smaller volume and weight to facilitate transport to the final disposal site.

Remember that sludge mixed with agricultural lime is an ex-

STEP 12.
MALFUNCTIONS AND CORRECTIVE ACTIONS

The most common failures are:

High solids content on the surfaces of the sedimentation system or in the effluent.

Cause:

- Accumulation of excessive amounts of bubbles on the water surface, or material adhering to the walls of the settler (upper part of the Ecofosa).
- Ascension of solids from the digestion chamber.
- High solids content in the raw wastewater.

Corrective actions:

- Remove floating material more frequently and completely.
- Drain sludge from the digestion tank.
- Avoid an excess layer of floating material and scum in the upper zone. Excess can force sludge into the settler.

Presence of foam in sludge digestion area

Cause:

Generally, foaming is characterized by the presence of a large amount of low density material rising to the surface and is caused by high digestion rates as a consequence of increased temperature, leading to floating of undigested material.

The phenomenon can also be caused by acid fermentation of sludge, as well as by:

- Beginning of the operation of the new Ecofosa with large amounts of sedimentable material and without the presence of sufficient "inoculum".
- Increased sludge temperature in the digestion zone during the dry season after the rainy season.
- Presence of large quantities of organic matter in the wastewater.

Corrective actions:

- Drain as much sludge as possible during the end of the dry season to allow sufficient digestion period during the rainy season.
- Drain small amounts of sludge frequently but keep enough to allow good digestion of the fresh sludge.

The bubbles, can be corrected by:

- Breaking of the layer of floating material present using pressurized water.
- Manual breaking of the foam layer to allow gases to escape.
- Addition of lime in grout so that it is uniformly distributed on the surface.

Sludge does not flow through the drainage pipe.

Cause:

- Highly viscous sludge.
- Obstruction of the pipe by sands, compacted mud, rags, bulky solids, etc.

Corrective actions:

- Through the extraction pipe introduce a rod to the bottom of the tank and probe it until liquefaction of the sludge is obtained.

- Insert a hose to the bottom of the pipe and release water under pressure.
- Check the mirror of the sludge register drain valve.
- When there are large quantities of sand it is necessary to drain the tank by pumping in order to remove them.

STEP 13.
EFFLUENT FROM THE ECOFOSA

The Ecofosa performs a preparatory process in the purification of wastewater, but this water does not have the physical-chemical or microbiological characteristics to be discharged to a receiving body or aquifers.

These waters must be sent to an oxidation system to complement the treatment. The systems are:

- Absorption well and/or.
- Infiltration field.

The selection of any of them depends on the available space and the permeability of the soil.

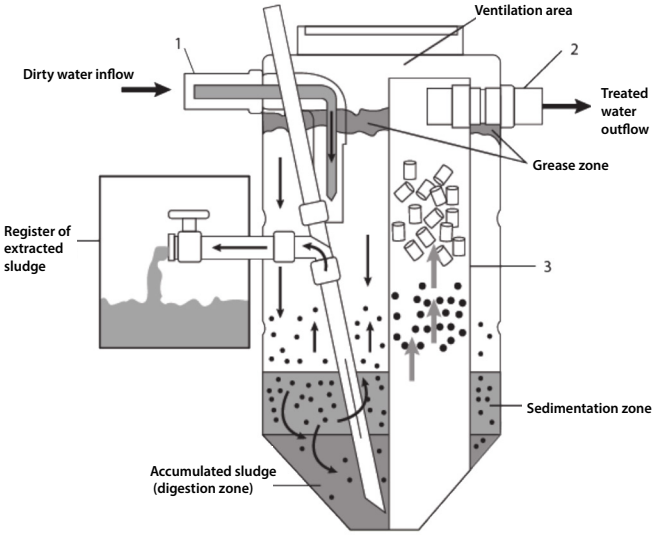

Warranty

Plycem warrants that if a product of its brand proves to be defective in materials or in the manufacturing process within 100 years from the date of manufacture, Plycem Eureka Tanks may, at its option, repair or replace such product.
Plycem's liability is limited solely to the value of the product and excludes the cost of installation, removal of damaged product or any consequential damages.

Neither Plycem nor its authorized distributors in Central America shall be liable for indirect damages or defects caused by an incorrect installation or by the omission of any of the points described in this document. Neither does it cover transportation or labor costs that may be generated by the incorrect application of the installation procedures indicated. The factory warranty covers manufacturing defects only.

It is not recommended that a Plycem Eureka Tank product be used for any purpose other than that described in this document. Any other use will void the Plycem Eureka Tank-product warranty either expressly or impliedly. In no event shall Plycem be held liable for consequential damages.
This standard limited warranty does not apply to damages resulting from misuse, misapplication of recommended materials, accidents, installation, omission of procedures or improper maintenance.

Find us in:

www.plycem.com contactoplycem@elementia.com /Experto Plycem

Manufactured by:

PLYCEM Construsistemas Costa Rica S.A.

PLYCEM Construsistemas El Salvador S.A.